RUGGED DATA RECORDER

MOUNTAIN SECURE SYSTEMS

RELIABLE PERFORMANCE WHEN IT COUNTS

DOLOMITE SERIES

www.mountainsecuresystems.com

DOLOMITE SERIES SPECIFICATIONS

Size	281.2mm x 200.4mm x 194.0mm
Weight	9.66 kg or 21.3 lbs
Power	• Boot up 53W • Read/write operations 48w • Maximum calculated–all 4 drives performing secure erase 81w
Connectors	MIL-DTL-38999 Power and Ethernet
Ethernet	Two gigabit Ethernet Optical Channels
Single Board Computer (SBC)	• Intel core 2 duo processor to 1.8 GHz, 3U VPX • Conduction, 4GB ECC DDR2 SDRAM, 4GB NAND • Flash, I2C for system environmental monitoring, PMC and XMC interface for expandability available • Two x4 PCI express interconnects, up to 6 SATA ports, RS-232, USB, GPIO
Read Performance (Using EGW Mix)	-40C to +80C
Storage Temperature (Using EGW Mix)	-40C to +85C
Coolant Connections	Various connections available per customer specification
Altitude (Feet)	-1,300 to +80,000
Operation Shock	20g 11 ms half sine
Operational Vibration	.05g^2/Hz, 20 to 2000 Hz random vibration for 30 minutes per IEC 60068-2-64
EMI	• CS101, 30 Hz to 150 kHz, MIL-STD-461 • CS114, 10 kHz to 200MHz, MIL-STD-461, Army ground limits • CS115 • CS116, 10 kHz to 100 MHz • CE102, per MIL-STD-461, relaxed 10dB • RS103 electric field, at 50V/m, 2 MHz to 18 GHz, MIL-STD-461 • RE102, MIL-STD-461, Army Ground Environment, relaxed 20dB
Diagnostics	Continuous diagnostic testing during operation via Ethernet channels
Thermal Shutdown	Automatic shutdown for hardware protection when temperatures exceed operational specifications
Battle Short	Commands accepted via Ethernet to prevent automatic shutdown due to thermal protection
Sanitization	Available erase/sanitization algorithms include: • Army AR 380-19 • DoD NISPOM 5220.22-M • DoD NISPOM 5220.22-M Sup 1 • Navy NAVSO P-5239-26 • NSA/CSS 130-2 • NSA/CSS 9-12
Startup	Within 60 seconds
LRU Components	Removable VPX Wedge Lock LRUs • Four sealed Alp Series, 128 gigabyte, SATA Solid State Drive modules with 100,000 cycle connectors • Single board computer • Power supply
LRU Built In Test (BIT)	Provides Built-In Test (BIT) status for each LRU

DOLOMITE SERIES

CHASSIS

SOLID STATE SERVER DRIVES

DOLOMITE STORAGE SYSTEM

The Dolomite Storage System is a liquid cooled, 3u VPX, ruggedized chassis with four Sealed Alp Series 128 Gigabyte, SATA Solid State Drive modules packaged in a robust enclosure with a docking connector interface, an SBC (Single Board Computer), 28V power supply, and an optical to copper Ethernet board. It is capable of running multiple OS platforms, and providing health and diagnostic status.

Mountain Secure Systems' expertise in data handling, ruggedization, and develop ment to customer specification has taken the company past simply packaging mass memory products into many different avenues of subsystem integrated box level electronic products. MSS has extensive experience integrating storage components with single board computers, adaptors, power supplies, cooling and heating systems, converters, backplanes, mil spec connectors, and custom software in many different custom and standard form factors. To learn more, call us at 888.884.9344.

DOLOMITE SERIES DIMENSIONS

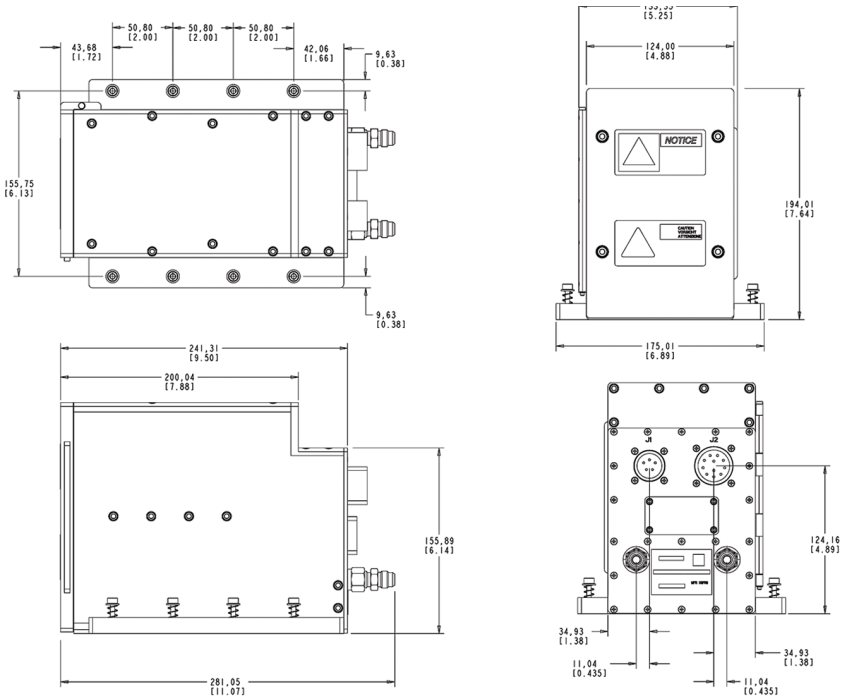

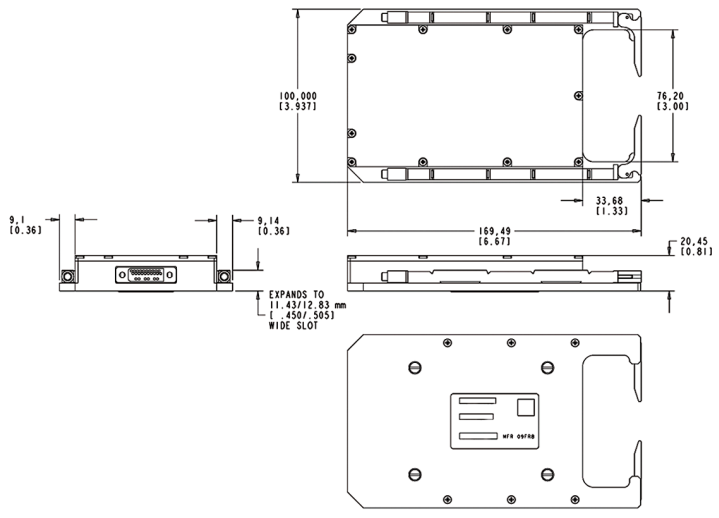

Nobody undestands the critical details of ruddedizing better than Mountain Secure Systems (MSS). MSS's rugged products have a phenomenal track record of withstanding the harshest environments imaginable. Our products perform flawlessly in adverse conditions, where extreme temperature, altitude, humidity and condensation, shock and vivration, explosive decompression and dust and dirt are elements of concern.

MOUNTAIN SECURE SYSTEMS

RELIABLE PERFORMANCE WHEN IT COUNTS

Made in the USA

1350 Kansas Avenue
Longmont, Colorado 80501-6545
888.884.9344

CAGE Code: 09FR8
9001:2008
AS9100B | J-STD-001

www.mountainsecuresystems.com